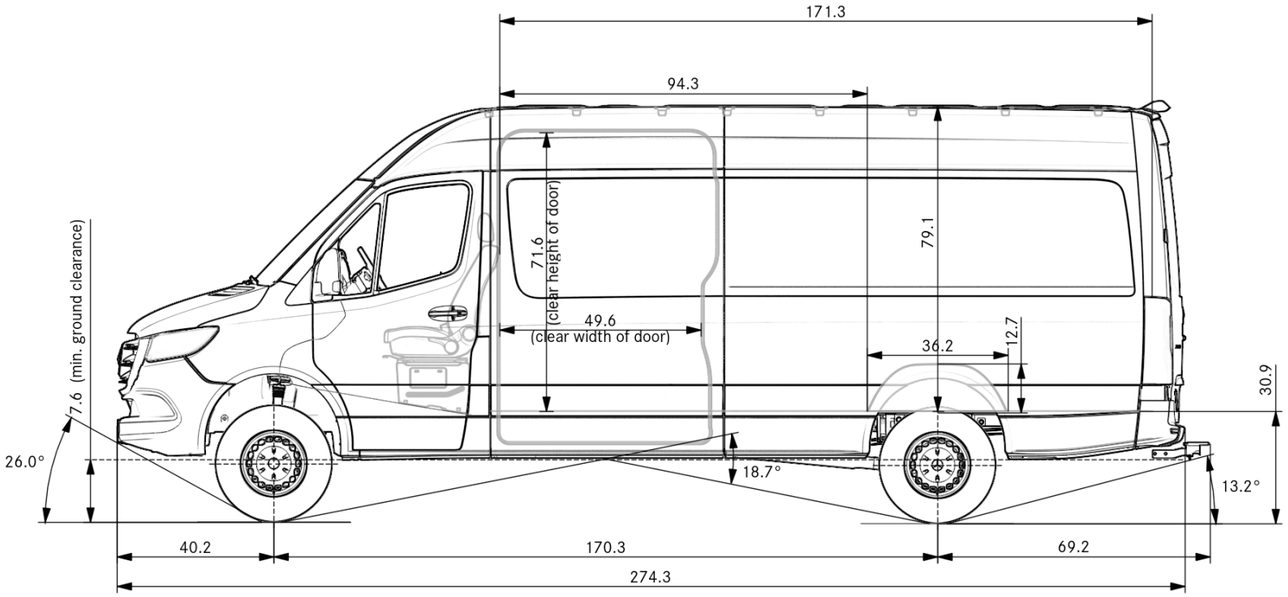


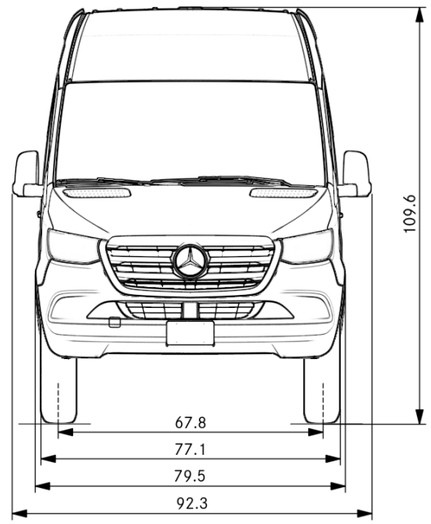


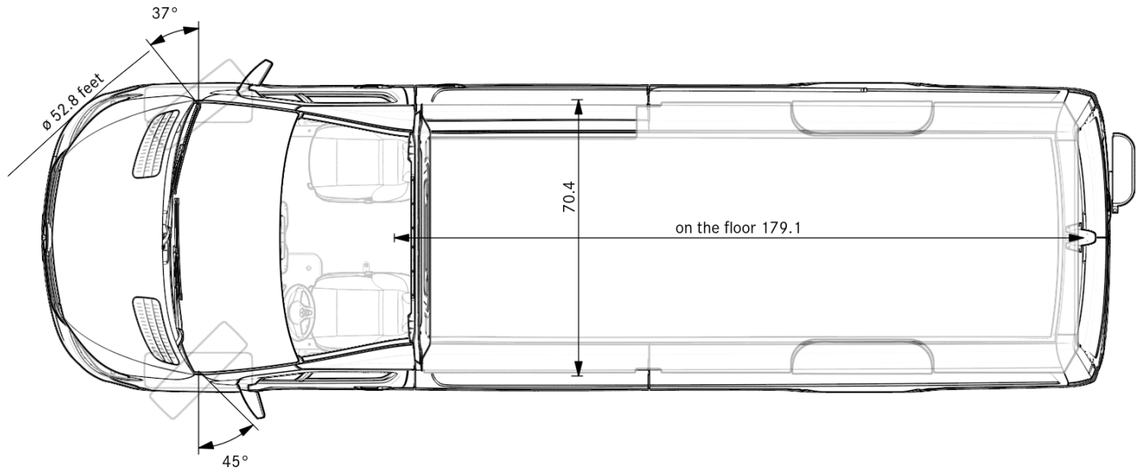


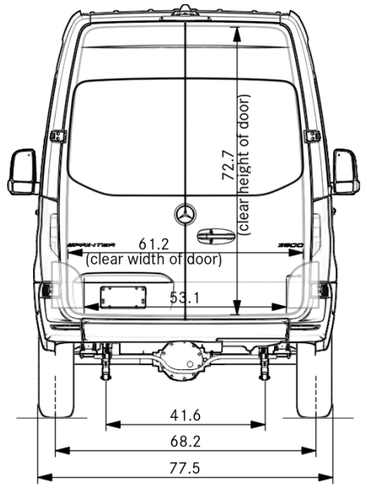


| Dimensions & weights: | |
|---|---|
| Cargo area [sq ft] | 74.27 |
| Cargo volume [cu ft] | 494.4 |
| Cargo volume partion wall [cu ft] | N/A |
| Luggage area [sq ft] | N/A |
| Luggage volume [cu ft] | N/A |
| Turning clearance circle - curb to curb [ft] | 50.2 |
| Gross vehicle weight [lbs] | 9,039 |
| Permissable front axle load [lbs] | 4,409 |
| Permissable rear axle load [lbs] | 5,357 |

| Optional equipment: | |
|---|---|
| D03 | high roof |
| D50 | partion wall |
| D93 | omission of partition |
| FKA | CARGO VAN |
| S02 | driver seat |
| S04 | adjustable co-drivers seat |
| T16 | sliding door, right |
| XZ0 | model generation |
| ZG1 | all-wheel drive, engageable |

| Base tyres: |
|---|
| Front axle N/A |
| Rear axle N/A |

Important notes:

- It is the responsibility of the bodybuilder to ensure that the vehicle is suitable for homologation after the body has been mounted.
- The drawing is simplified to some extent and is not legally binding.
- Please check whether the drawing specification complies with the chassis configuration of your order.
- Optional equipment codes not listed here, KW-codes and changes resulting from feasibility checks are not included in the drawing.
- Our instructions for the manufacture of superstructures must be observed, when planning to fit bodies of other than Mercedes-Benz manufacture.

All dimensions refer to the standard version and the base tyres.
In laden condition all axles are fully loaded (see table).

We reserve all rights for this drawing. The drawing may neither be copied nor passed on to any third person.

Dimensions are subject to a tolerance of up to +/- 3%.

CARGO VAN
A3LH2/4x4/9,039
907645

Mercedes-Benz

29.03.2023