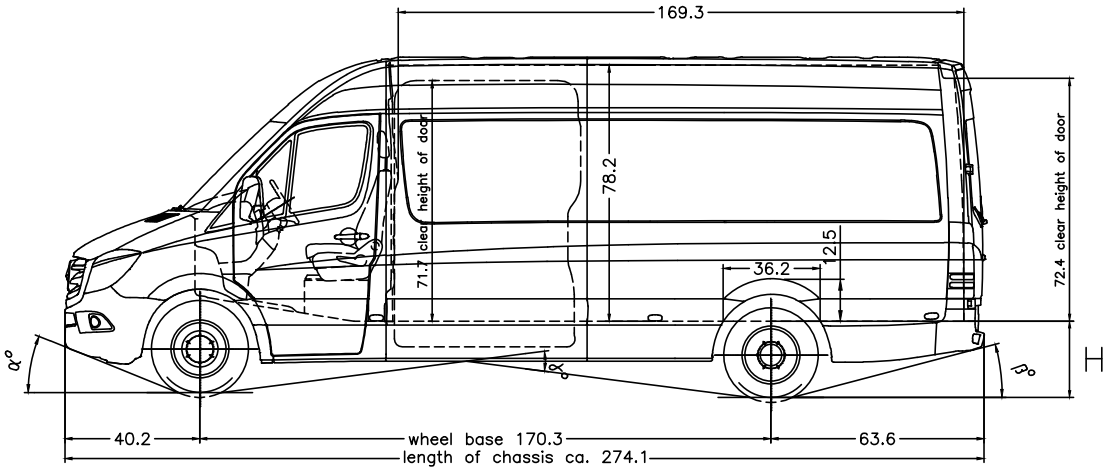

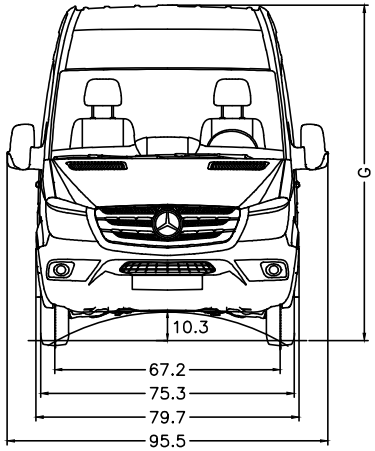

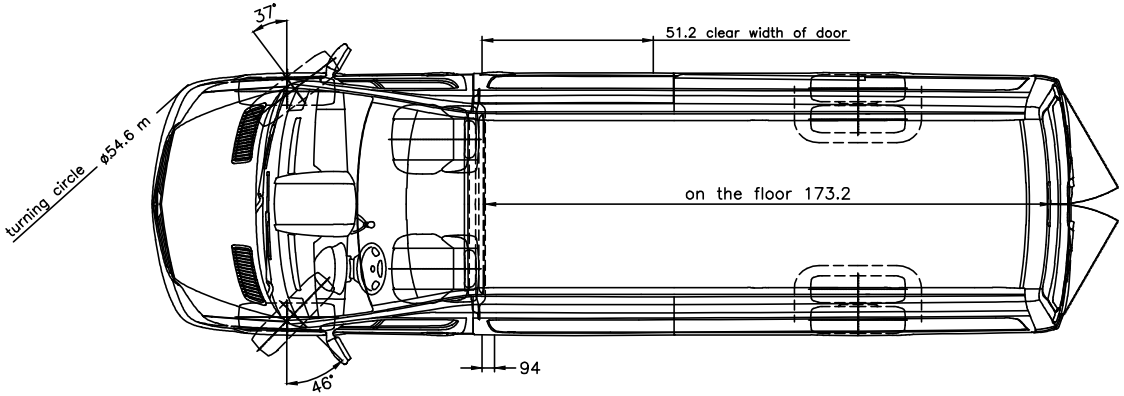

Hecktueroeffnung 90°/180°
(rear door opening)
Sonderausruestung 260°
(optional equipment)

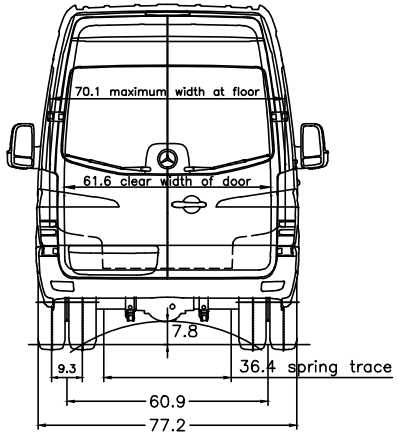

D50 Full-length partition
IC3 Sprinter standard
IR8 Wheelbase 4325 mm, overhang 1615 mm
MG3 Engine OM 651 DE 22 LA 120 kW (163 hp) 3800 rpm
MH5 Engine low-emission EPA 14/CARB
RH7 Tyres LT 215/85 R16
S04 Adjustable co-drivers seat
T16 Sliding door right
XM0 Facelift
ZM0 Panel van

D03 High roof
D03 High roof

Important notes:
- It is the responsibility of the bodybuilder to ensure that the vehicle is suitable for homologation after the body has been mounted.
- The drawing is simplified to some extent and is not legally binding. For more details and further explanations please see the MBAS-Web User Guide in the bodybuilder portal.
- Please check whether the drawing specification complies with the chassis configuration of your order.
- Optional equipment codes not listed here, KW-codes and changes resulting from feasibility checks (BBA) are not included in the drawing.

vehicle type :	loading space =	494 cu.ft.	H		G	α°	β°	γ°
				unladen	unladen			
906.655-13	76.4 sq.ft.		24.7	27	110.8	18	12	14

tyres		gross vehicle weight	GVW (t)	FA (t)	RA (t)
	215/85R16 215/85R16		2269	839	

All dimensions refer to the standard version.
Measurements of laden vehicle.

Our instructions for the manufacture of superstructures must be observed, when planning to fit bodies of other than Mercedes-Benz manufacture.

Subject to change.

				23.04.15	
ZOS	Date	Order no.	ZOS	Date	Order no.

We reserve all rights for this drawing.The drawing may neither be copied nor passed on to any third person.

Dimensions are subject to a tolerance of up to +/- 3%

drawn by	Daimler	Format	A4
checked by	Daimler		
released by	Daimler		

Abtlg.(dept.)TE/SOD
70546 Stuttgart

Mercedes-Benz

Cargo Van/Crew Van

3500/4x2/170.3

HVA 9061000231