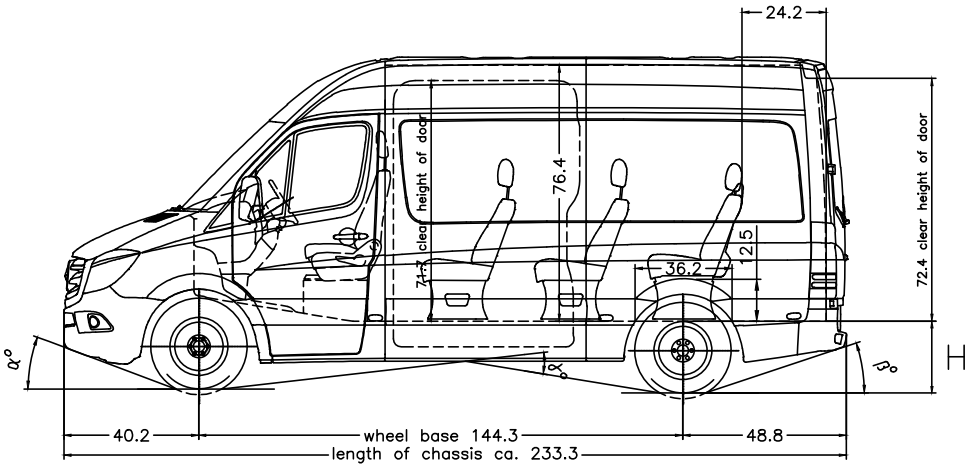

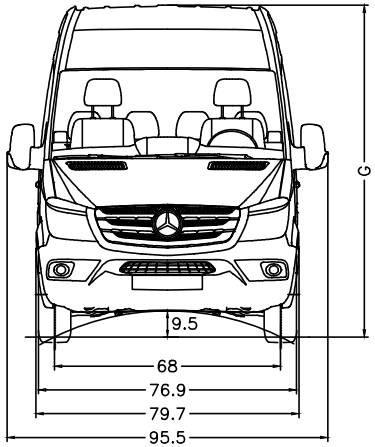

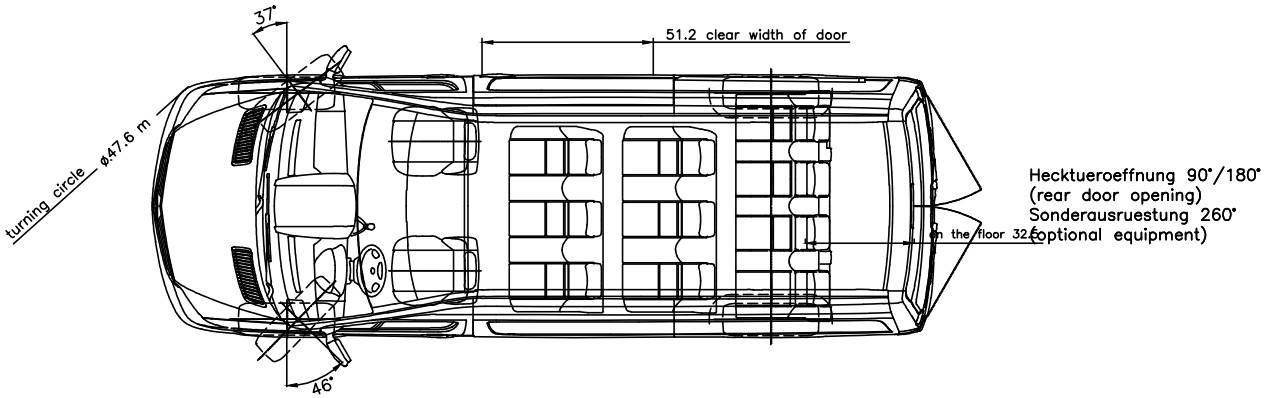

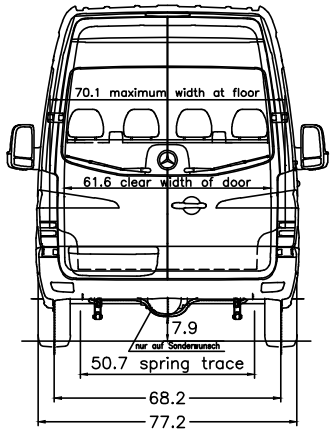

NH5 Engine low-emission EPA 14/CARB
RH8 Tyres LT 245/75 R16
S04 Adjustable co-drivers seat
T16 Sliding door right
U02 Seats pass. comp. 3-seat bench 1st row narrow
UC3 Pass. comp. seating, 3-seater bench/narrow 2nd row
UD6 Passenger seats, 4-seater bench 3rd row
XL8 Higher weight 3.050 kg
XM0 Facelift
ZM4 Crewbus

D03 High roof
D03 High roof
I03 Sprinter standard
IR4 Wheelbase 3665 mm
MC3 Engine OM 651 DE 22 LA 120 kW (163 hp) 3800 rpm

Important notes:
- It is the responsibility of the bodybuilder to ensure that the vehicle is suitable for homologation after the body has been mounted.
- The drawing is simplified to some extent and is not legally binding. For more details and further explanations please see the MBAS-Web User Guide in the bodybuilder portal.
- Please check whether the drawing specification complies with the chassis configuration of your order.
- Optional equipment codes not listed here, KW-codes and changes resulting from feasibility checks (BBA) are not included in the drawing.

vehicle type :	loading space = 371 cu.ft.	H		G			
			unladen	unladen	α°	β°	γ°
906.733-13	59.2 sq.ft.	23.6	26.2	107.3	18	16	16

tyres		gross vehicle weight	GVW (t)	FA (t)	RA (t)
245/75R16	245/75R16		1759	816	

All dimensions refer to the standard version. Measurements of laden vehicle.

Our instructions for the manufacture of superstructures must be observed, when planning to fit bodies of other than Mercedes-Benz manufacture.

Subject to change.

ZGS	Date	Order no.	ZGS	Date	Order no.
				16.06.15	

We reserve all rights for this drawing.The drawing may neither be copied nor passed on to any third person.

Dimensions are subject to a tolerance of up to +/- 3%

drawn by	Dr. Müller	Format	A4
checked by	Dr. Müller		
released by	Dr. Müller		

Abtlg.(dept.)TE/SOD
70546 Stuttgart

Mercedes-Benz

Passenger Van

2500/4x2/144.3

HVA 9061000286