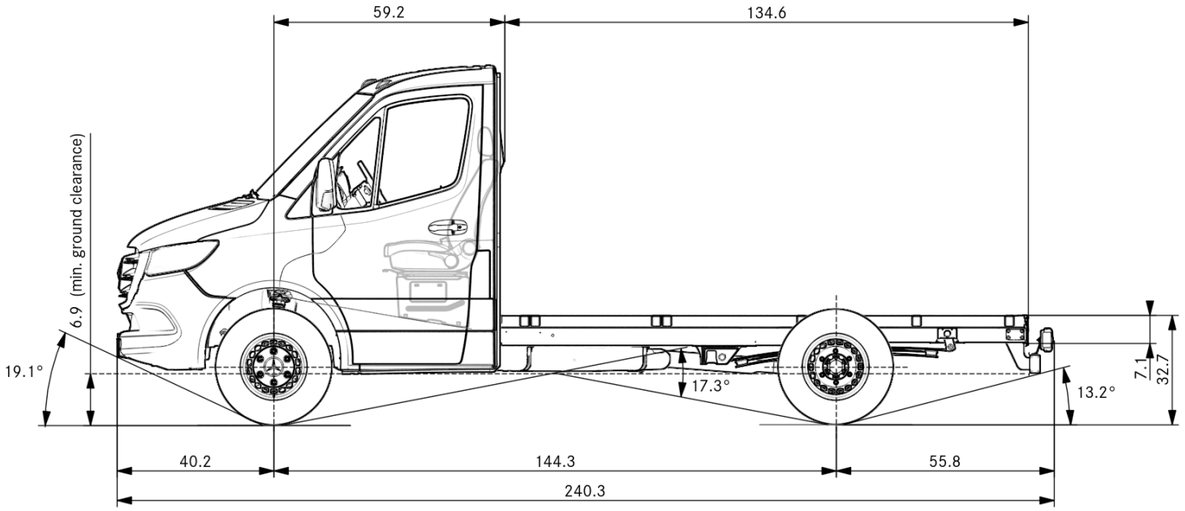

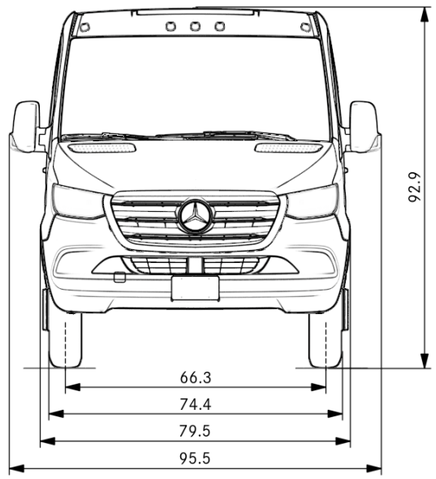

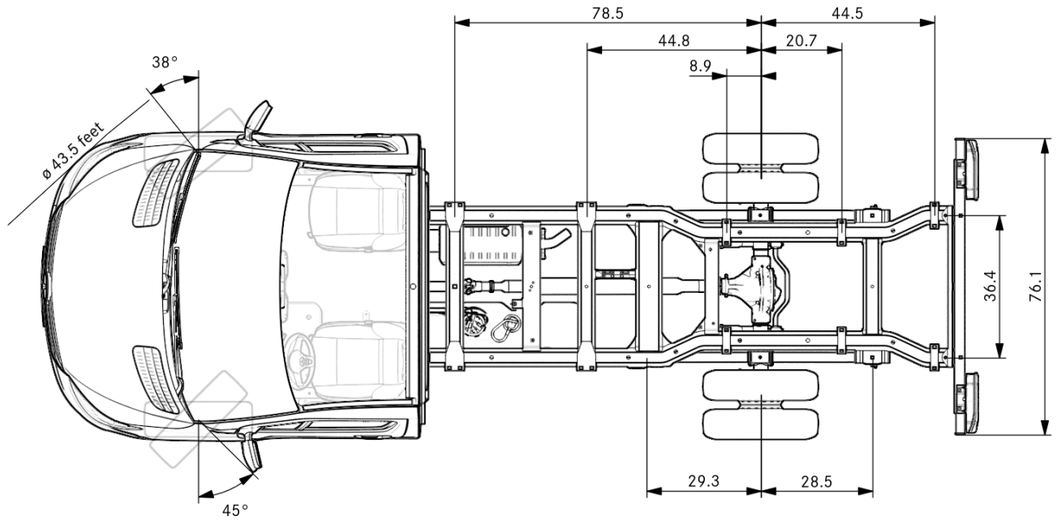

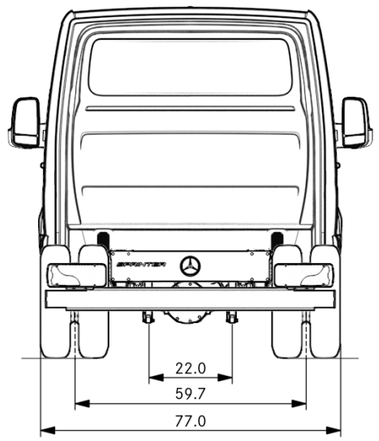

Dimensions & weights:		
Cargo area [m²]		N/A
Cargo volume [m³]		N/A
Luggage area [m²]		N/A
Luggage volume [l]		N/A
Turning clearance circle - curb to curb [m]		4.8
Gross vehicle weight [kg]		11,023.1
Permissable front axle load [kg]		4,078.6
Permissable rear axle load [kg]		7,716.2
	laden	unladen
Vehicle height [mm]	894.9	929.1
Minimal ground clearance [mm]	68.1	69.3
Rear lift in height [mm]	263.4	327.2
Driver's door step height [mm]	159.8	185.4
Side cargo step height [mm]	N/A	N/A

Optional equipment:	
FHS	CAB CHASSIS
MP6	engine version Euro VI
S02	driver seat
S04	adjustable co-drivers seat
XZ0	model generation

Base tyres:	
Front axle	N/A
Rear axle	N/A

Important notes:

- It is the responsibility of the bodybuilder to ensure that the vehicle is suitable for homologation after the body has been mounted.
- The drawing is simplified to some extent and is not legally binding.
- Please check whether the drawing specification complies with the chassis configuration of your order.
- Optional equipment codes not listed here, KW-codes and changes resulting from feasibility checks are not included in the drawing.
- Our instructions for the manufacture of superstructures must be observed, when planning to fit bodies of other than Mercedes-Benz manufacture.

All dimensions refer to the standard version and the base tyres.
In laden condition all axles are fully loaded (see table).

We reserve all rights for this drawing. The drawing may neither be copied nor passed on to any third person.

Dimensions are subject to a tolerance of up to +/- 3%.

CAB CHASSIS
A2LH1/RWD 4x2/11,023.1
907153

Mercedes-Benz

17.03.2023