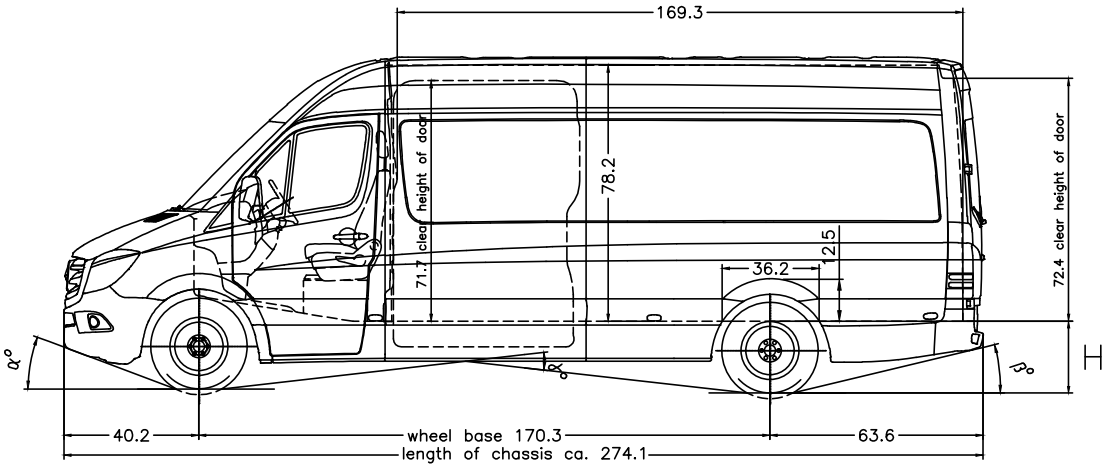

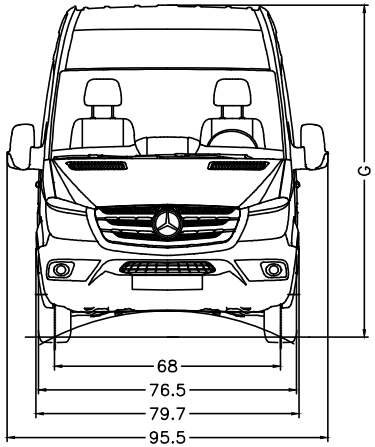

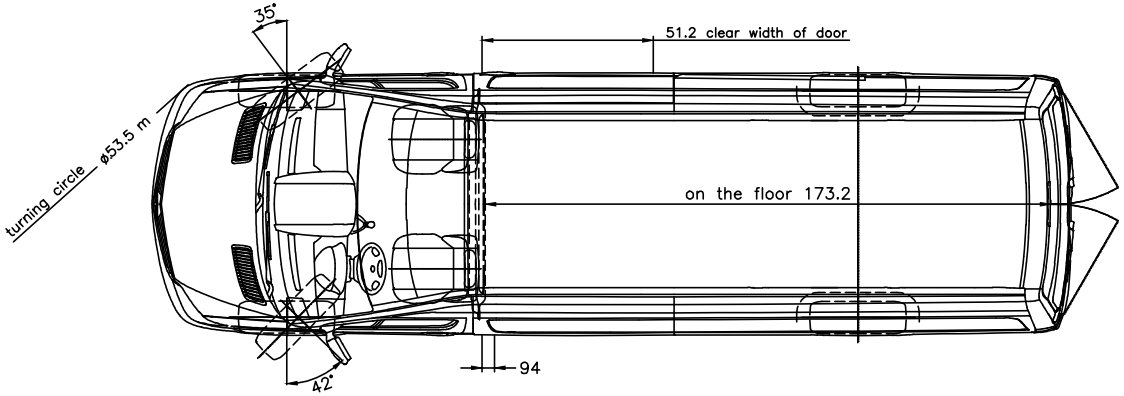

Hecktueroeffnung 90°/180°
(rear door opening)
Sonderausruestung 260°
(optional equipment)

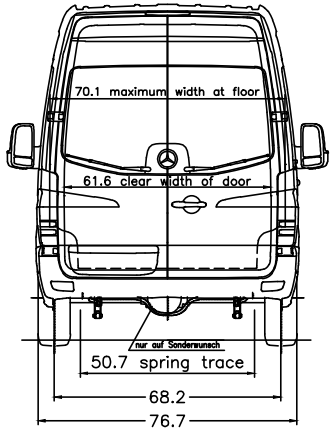

D03 High roof
D03 High roof
D50 Full-length partition
IC3 Sprinter standard

IR6 Wheelbase 4325 mm, overhang 1615 mm
MG5 Engine OM 642 DE 30 LA 140 kW (190 hp) 3800 rpm
MH5 Engine low-emission EPA 14/CARB
RH8 Tyres LT 245/75 R16
S04 Adjustable co-drivers seat
T16 Sliding door right
XL8 Higher weight 3.880 kg
XM0 Facelift
ZG1 All-wheel drive, engageable
ZM0 Panel van

Important notes:
- It is the responsibility of the bodybuilder to ensure that the vehicle is suitable for homologation after the body has been mounted.
- The drawing is simplified to some extent and is not legally binding. For more details and further explanations please see the MBAS-Web User Guide in the bodybuilder portal.
- Please check whether the drawing specification complies with the chassis configuration of your order.
- Optional equipment codes not listed here, KW-codes and changes resulting from feasibility checks (BBA) are not included in the drawing.

vehicle type :	loading space = 494 cu.ft.	H		G			
			unladen	unladen	α°	β°	γ°
906.635-13	79.7 sq.ft.	25.3	29.4	108.3	27	28	19

tyres		gross vehicle weight	GVW (t)	FA (t)	RA (t)
225/75R16	225/75R16		1759	816	

All dimensions refer to the standard version. Measurements of laden vehicle.

Our instructions for the manufacture of superstructures must be observed, when planning to fit bodies of other than Mercedes-Benz manufacture.

Subject to change.

ZGS	Date	Order no.	ZGS	Date	Order no.
				23.04.15	

We reserve all rights for this drawing.The drawing may neither be copied nor passed on to any third person.

Dimensions are subject to a tolerance of up to +/- 3%

drawn by	Dr.Müller	Format	A2
checked by	Dr.Müller		
released by	Dr.Müller		

Abtlg.(dept.)TE/SOD
70546 Stuttgart

Mercedes-Benz

Cargo Van/Crew Van

2500/4x2/170.3

HVA 9061000188